ASS	QTY.	SEQ
510TR1	ONE	5

BILL OF MATERIAL

QTY.	PIECE MARK	MINOR MARK	MATERIAL	LENGTH	WEIGHT UNIT	WEIGHT TOTAL	REMARKS	GRADE	A.B.M
ONE	510TR1		TRUSS		1975	1975			
ONE		a510	WT8x20	34'-5 5/16	689	689			530
ONE		b510	WT8x20	28'-9 1/16	575	575			529
ONE		c509	2L 3x3x1/4	2'-6 5/8	25	25		A36	
ONE		d509	2L 3x3x1/4	5'-8 7/8	56	56		A36	
ONE		e509	2L 3x3x1/4	4'-6 1/2	45	45		A36	
ONE		f509	2L 3x3x1/4	7'-10 3/4	77	77		A36	
ONE		g509	2L 3x3x1/4	6'-6 1/2	64	64		A36	
ONE		h509	2L 3x3x1/4	9'-3 3/4	91	91		A36	
ONE		k509	2L 3x3x1/4	8'-6 1/2	84	84		A36	
ONE		m509	2L 3x3x1/4	10'-3 3/4	101	101		A36	
2		n509	PL 1/4x6 1/2	1'-4 5/8	8	15		A36	
2		p509	PL 1/4x6 1/2	0'-6 7/8	3	6		A36	
2		s509	PL 1/4x6 1/2	1'-6 1/2	9	17		A36	
2		t509	PL 1/4x6 1/2	1'-3	7	14		A36	
2		v509	PL 1/4x8 1/2	1'-4 3/8	10	20		A36	
2		w509	PL 1/4x4	0'-6 1/2	2	4		A36	
2		aa509	PL 1/4x8 1/16	1'-11 7/8	11	22		A36	
2		ab509	PL 1/4x9 1/8	0'-9 1/2	6	12		A36	
2		ac509	PL 1/4x9	0'-10 7/8	7	14		A36	
10		ad509	PL 3/8x3 1/2	0'-7 3/8	3	28		A36	

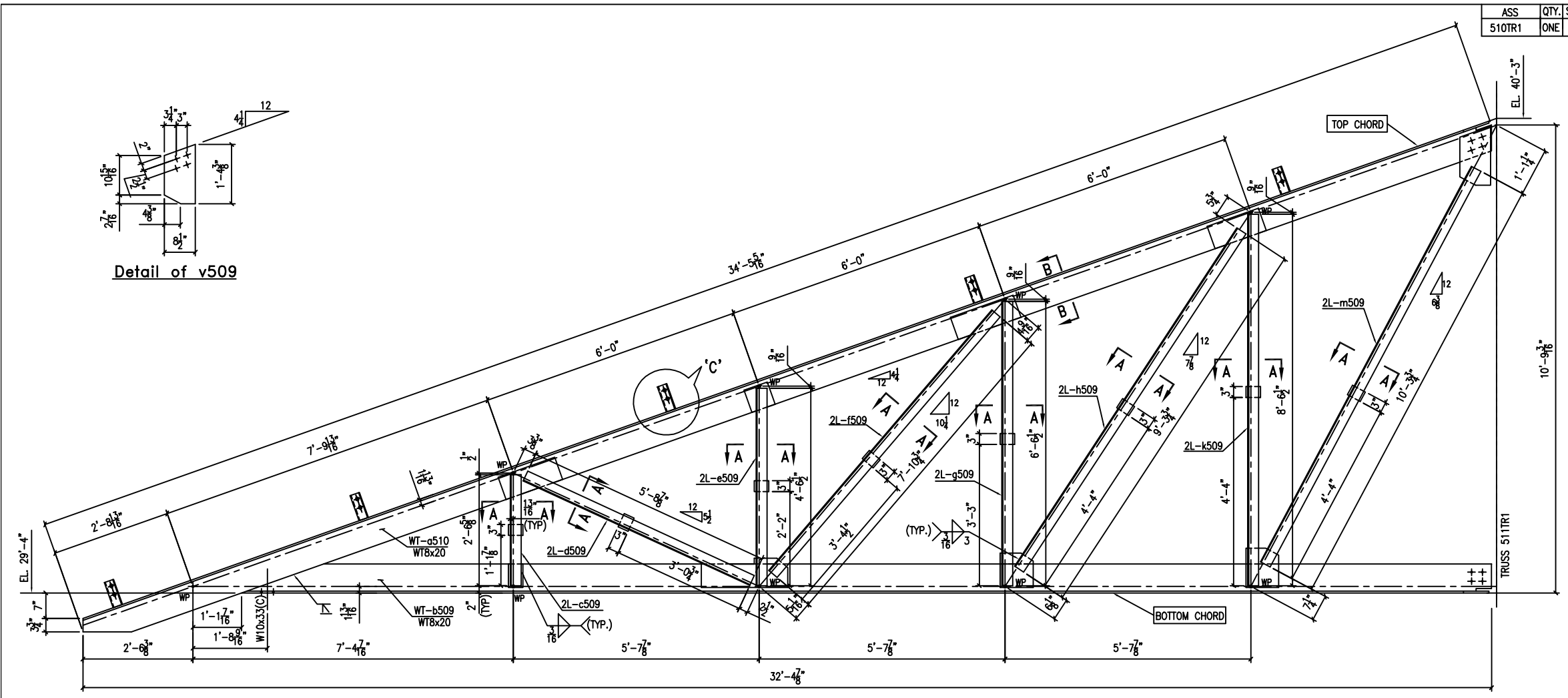

ONE TRUSS – 510TR1

Detail of v509

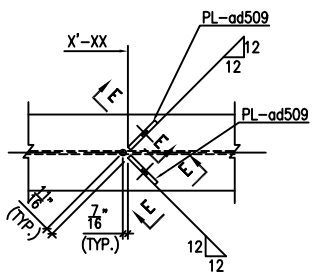

D–D

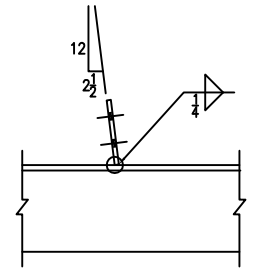

E–E

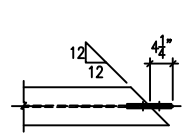

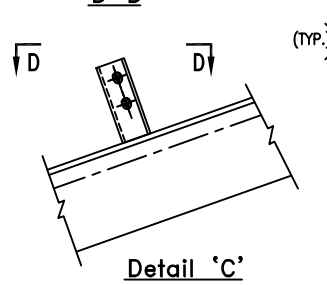

Detail 'C'

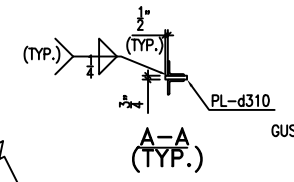

A–A (TYP.)

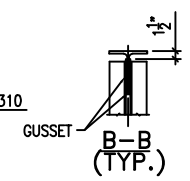

B–B (TYP.)

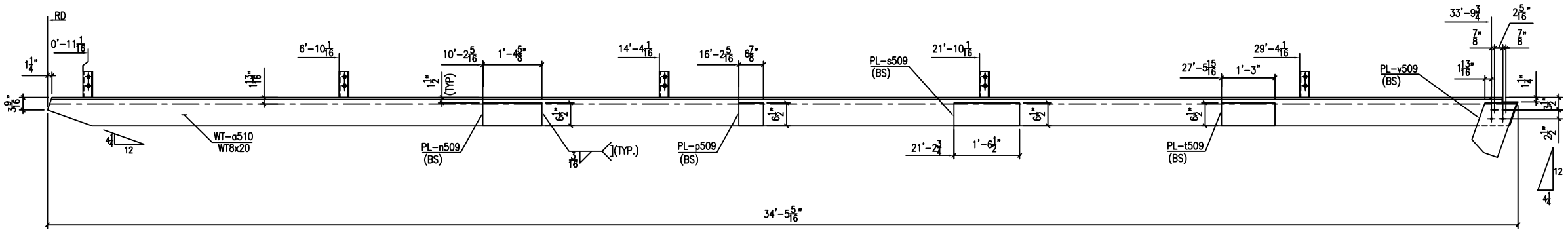

Detail of Top Chord
(Sub Assembly)

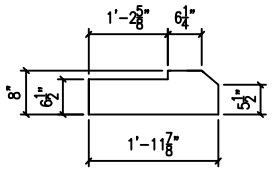

Detail of aa509

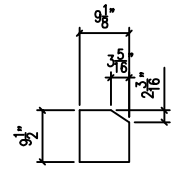

Detail of ab509

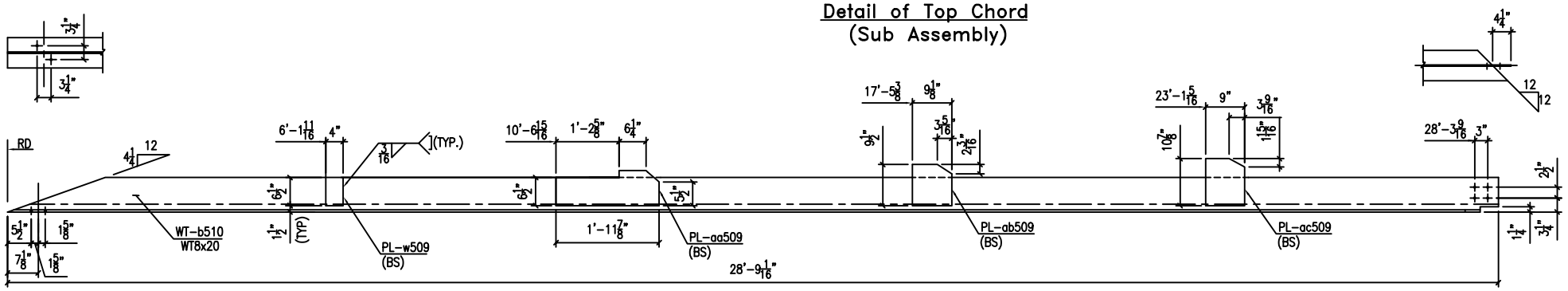

Detail of Bottom Chord
(Sub Assembly)

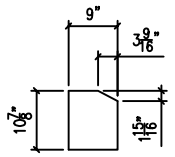

Detail of ac509

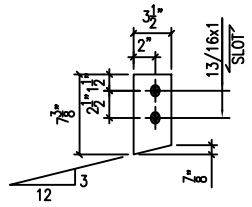

Detail of ad509

SHOP ISSUE
DATE: 02-17-05

SHOP NOTES:
1. ALL WELDING IS TO CONFORM TO AWS SPECIFICATIONS.
2. ASSEMBLY MARK TO BE STAMPED ON TOP FACE, LEFT HAND END.
3. ALL COPES TO HAVE 1/2" RADIUS AT INTERNAL CORNERS U.O.N.
4. ALL BOLTS U.N. TO BE A325N

PROJECT:	THE OLD GUARD VECHILE MAINTENANCE FACILITY		
ITEM:	TRUSS DETAILS (510TR1)		
CUSTOMER:	JOHN C. GRIMBERG Co.INC		
ARCHITECT:	THE LUKMIRE PARTNERSHIP INC.		
ENGINEER:	US ARMY CORP. OF ENGINEERS		
SURF.PREP.	FINISH: STANDARD SHOP PRIMER		
HOLES:	13/16" U.O.N.	DRN. BY JA	DATE 10.07.2004
MATERIAL U.N	ASTM A992-GR.50 UN	CHKD. BY KRR	DATE 02.08.2005
		JOB NO. 24019	REV #
WELDING U.N	E70XX	DWG. 510	0

REV.#	DATE	BY	REVISION
0	–	–	–